**S51**
**S510-F770 Built-in sink 370/370**
Finish: **Graphiteblack** Article Number: **43316170**

## Description

**product features**

- cut-out dimensions: 860 x 490 mm
- material: SilicaTec
- number of bowls: 2 main bowls
- tap hole for drilling is predefined (see scale drawing), diamond drill included
- cabinet size: 90 cm
- installation type: topmount
- position overflow: on the right side of the main bowl
- sink depth: 190 mm
- waste set not included - please order one waste set from the required parts

## Product image
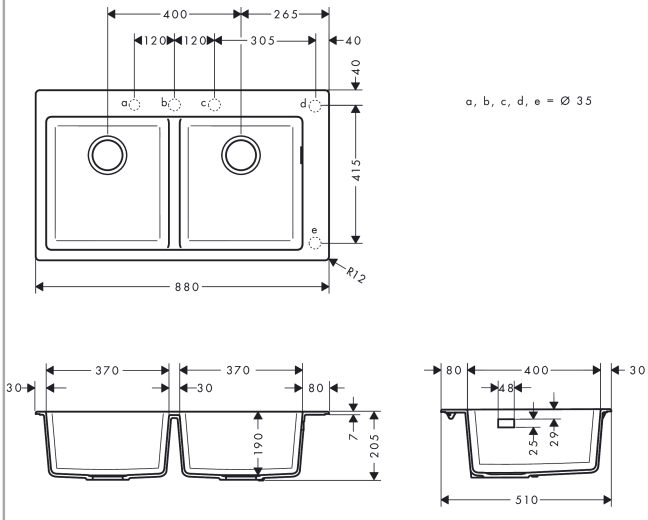
## Scale drawing